SIERRA PACIFIC WINDOWS

Aluminum Clad Wood Casement Operating Window Single Unit Nail Fin Installation/Non-Impact

CCL Listing #	

Aluminum Clad Wood Casement Operating Window
Nail Fin Installation / WDMA Instructions / Non-Impact

SHEET: 1 OF 2		DRAWN BY: D.S.

1-WIDE ELEVATION VIEW
FASTENER LOCATION & SPACING

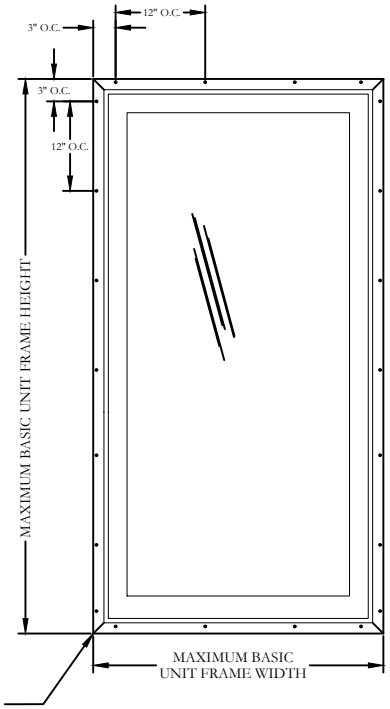

AT EACH CORNER APPLY SEALANT TO BACK SIDE OF 45° MITER JOINT ON THE FLANGE BETWEEN THE UNIT AND THE ROUGH OPENING

Pre - Installation

- Check rough opening for proper size, plumb, level and square.
- Sill must be flat, level and capable of supporting the weight of the unit.
- Opening must allow a maximum of 3/8" shim space at head, sill and jambs.
- Consult full installation instructions found on the Sierra Pacific web site, www.sierrapacificwindows.com, for all recommended installation procedures.
- Wood buck, framing, fasteners, sealant and all wall system materials are provided **by others**

Flashing

- For units that have to meet a specific DP (Design Pressure) rating, any kind of building wrap must be folded and taped away from each rough opening before the unit is installed. Unit must come in contact with the building's bare sheathing. A bead of sealant must be applied to the backside of the nail fin where it meets the unit, at head and jambs. Apply a discontinuous bead of sealant to the sill.
- Once unit is installed and flashed properly, the building wrap must be reapplied and trimmed flush with the unit's exterior. A bead of sealant must be placed along the seam joint of the building wrap and the unit. Tape the corner cuts in the building wrap. See full window installation brochure for complete flashing details.

Width	Height	Design Pressure	Rating	CCL Listing #	Report No.
42" (1066mm)	76" (1930mm)	±50.13 psf	Class CW-PG50	429-H-560.03	G3339.01-901-47-R1
38" (966mm)	84" (2134mm)	±50.13 psf	Class CW-PG50	429-H-560.06	G3339.01-901-47-R1
36" (914mm)	84" (2134mm)	±55.14 psf	Class CW-PG55	429-H-560.09	G3341.01-901-47-R1
36" (914mm)	72" (1828mm)	±65.16 psf	Class CW-PG65	429-H-560.12	G3341.01-901-47-R1
36" (914mm)	84" (2134mm)	±55.14 psf	Class CW-PG55	429-H-560.27	G3343.01-901-47-R1
36" (914mm)	84" (2134mm)	±55.14 psf	Class CW-PG55	429-H-560.00	G3344.01-901-47-R1
32" (812mm)	84" (2134mm)	±50.13 psf	Class CW-PG50	429-H-560.15	G3345.01-901-47-R1
32" (812mm)	84" (2134mm)	±50.13 psf	Class CW-PG50	429-H-560.18	G3345.01-901-47-R1
32" (812mm)	84" (2134mm)	±50.13 psf	Class CW-PG50	429-H-560.24	G3347.01-901-47-R1
38" (966mm)	96" (2438mm)	±65.16 psf	Class CW-PG65	429-H-560.21	G4650.01-901-44-R1

SIERRA PACIFIC WINDOWS

Aluminum Clad Wood Casement
Operating Window
Single Unit Nail Fin
Installation/Non-Impact

CCL Listing #	

Aluminum Clad Wood Casement Operating Window
Nail Fin Installation / WDMA Instructions / Non-Impact

SHEET: 2 OF 2		DRAWN BY: D.S.

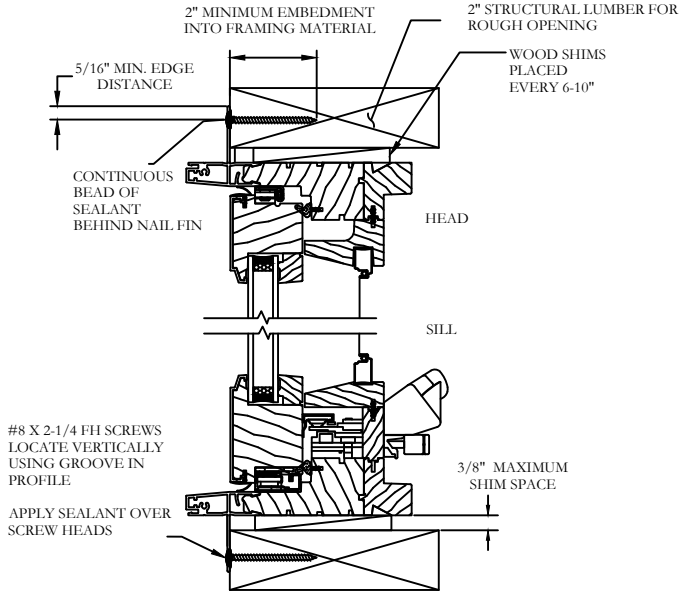

VERTICAL SECTION

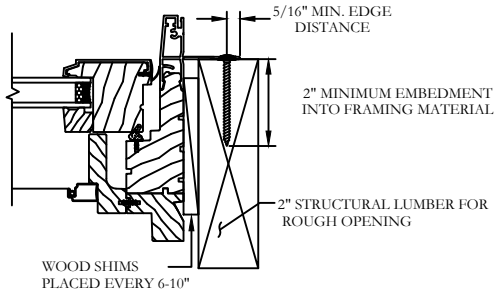

HORIZONTAL SECTION

INSTALLATION NOTES:

Installation

1. Use 2" structural lumber or greater for rough opening
2. Place shims every 6" - 10" ($\frac{3}{8}$" max shim space)
3. Apply a continuous bead of sealant between the nailing fin and the rough opening along the head and sides. Apply a discontinuous bead of sealant on the sill.
4. Install #8 x 2-1/4" flathead screws into the extruded groove of the nailing fin with a $\frac{5}{16}$" minimum edge distance, spaced approximately 3" from each corner and 12" on center thereafter, through the nailing fin into the framing material
5. Apply sealant over the screw heads
6. At each corner apply sealant to the back side of the 45° miter joint on the flange between the unit and the rough opening
7. Apply a continuous bead of sealant around the full perimeter at the edge of the nail fin
8. 2" minimum fastener embedment into framing material

Installation requirements may vary in particular locations and in other types of construction. Proper installation is essential, and Sierra Pacific Windows, recommends consultation with an AAMA Certified Installer, or other qualified, registered building professional before installation of any Sierra Pacific product. Proper installation of Sierra Pacific products is the responsibility of the installer. Sierra Pacific is not responsible for proper installation. Sierra Pacific is not responsible for the design of, conditions in, or performance of building construction beyond the perimeters of the Sierra Pacific units. Sierra Pacific is not responsible for proper integration of the Sierra Pacific units with the weather-repellent systems of the building.